PG79288 PG79287 PG79390 PG79388 Simple 3.3V/5V/12V 4A eFuse Protection Switches

Features

- PG79288 - 3.3V eFuse
- PG79287 - 5V eFuse
- PG79390 – 2.97V to 18V input
- PG79388 - 12V eFuse
- Integrated 34mΩ Pass MOSFET
- Adjustable 0.5A to 4A current limit
- Adjustable output slew rate
- Enable with adjustable input UVLO threshold
- Fixed over-voltage camp: 3.8V for PG79288, 5.7V for PG79287 and 13.7V for PG79388
- Built-on over temperature protection
- Small 2x2mm WSON package
- RoHS compliant and Green

Applications

- Hot-swap, hot-plug
- PCI and PCIe cards
- Adapter powered devices
- HDD and SSD drivers

Description

The PG79288/287/390/388 devices are active circuit protection devices with an integrated MOSFET used to limit current and voltage to safe levels during fault conditions.

The current limit level can be set with a resistor between ILM and ground, and the typical current limit accuracy is ±7.5%.

The device has over voltage protection feature which limits the output voltage to a fixed level when over voltage fault occurs.

To limit the inrush current during device turn-on, the rising slew rate of output voltage can be set by a capacitor between dVdt and ground.

The device also offers EN on/off control and input UVLO features.

The device is available in WSON 8 pins, 2x2 mm package.

Typical Application Circuit

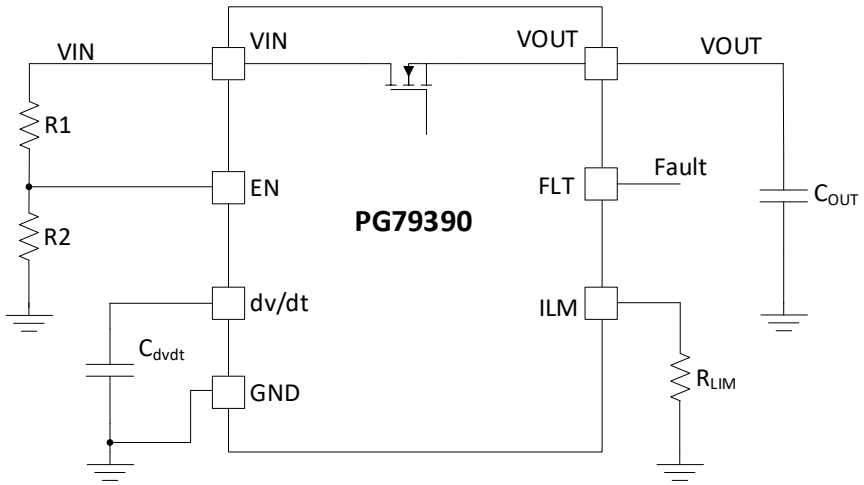

IPG SEMICONDUCTOR (SHENZHEN) CO.,LTD. All rights reserved.